Assembly Instructions

Grundig SAT Systems

Head-End Digital HD Encoder

HDE 401

English

GSS
Grundig SAT Systems GmbH
Beuthener Strasse 43
D-90471 Nuremberg

Phone: +49 (0) 911 / 703 8877
Fax: +49 (0) 911 / 703 9210
E-mail: info@gss.de
Internet: http://www.gss.de/en

Contents

1 Safety regulations and notes

- Assembly, installation and servicing should be carried out by authorised electricians.
- Switch off the operating voltage of the system before beginning with assembly or service work or pull out the mains plug.
- Do not perform installation and service work during thunderstorms.
- Install the system so it will not be able to vibrate…
  - in a dust-free, dry environment
  - in such a manner that it is protected from moisture, fumes, splashing water and dampness
  - somewhere protected from direct sunlight
  - not within the immediate vicinity of heat sources
  - in an ambient temperature of 0 °C to +50 °C. In case of the formation of condensation wait until the system is completely dried.
- Ensure that the head-end station is adequately ventilated. Do not cover the ventilation slots.
- Beware of short circuits
- No liability is accepted for any damage caused by faulty connections or inappropriate handling.
- Observe the relevant standards, regulations and guidelines on the installation and operation of antenna systems.
- The standards EN/DIN EN 50083 resp. IEC/EN/DIN EN 60728 must be observed.
- **For further information please read the assembly instructions for the head-end station used.**
- **Test the software versions of the head-end station and the cassette and update them if necessary. The current software versions can be found at "www.gss.de/en".**

Take action to prevent static discharge when working on the device!

Electronic devices should never be disposed of in the household rubbish. In accordance with directive 2002/96/EC of the European Parliament and the European Council from January 27, 2003 which addresses old electronic and electrical devices, such devices must be disposed of at a designated collection facility. At the end of its service life, please take your device to one of these public collection facilities for proper disposal.

2 General information

2.1 Packing contents

1 Cassette HDE 401
1 BNC cable
1 Brief assembly instructions

2.2 Meaning of the symbols used

⚠ Important note

—> General note

• Performing works

2.3 Technical data

The devices meet the following EU directives:
73/23/EWG, 89/336/EWG
The product fulfils the guidelines and standards for CE labelling (page 27).

Unless otherwise noted all values are specified as "typical".

Component Video Input

Input level ..... Y 1 V_{ss}, Pb/Pr 0,7 V_{pp}
Input impedance ..... 75 Ω
Tested Video Formats 1920x1080i50, 1280x720p50, 720x576p50, 720x480p59
Supported standards ..... PAL

CVBS Video Input

Input level ..... 1 V_{pp}
Input impedance ..... 75 Ω
Frequency range ..... 20 Hz ... 5 MHz
Supported standards ..... PAL BG

Audio Input

Input level ..... 500 mV_{rms}
Frequency range ..... 20 Hz ... 15 kHz

MPEG4 Encoder

Transport stream ..... H.264/AVC High Profile Level 4.0
Setting range of total data rate (video + audio + tables) ..... 1 Mbit/s...30 Mbit/s
Video data rate:
1920x1080i ..... 6 Mbit/s...24 Mbit/s
1280x720p ..... 4 Mbit/s...24 Mbit/s
720x576i ..... 1 Mbit/s...10 Mbit/s
720x480i ..... 2 Mbit/s...10 Mbit/s
Audio data rate ..... 32 kb/s...384 kb/s

ASI Interfaces

Norm ..... DIN EN 50083-9
Format ..... MPEG ISO IEC 13818-1
Max. data rate ..... 108 Mbit/s
Impedance ..... 75 Ω
Level (input / output) ..... 800 mV_{pp} ± 10%
Return loss (input) ..... > 17 dB (5 ... 270 MHz)

Connections

Video Inputs:
Component YPbPr ..... 3 Cinch sockets
CVBS ..... 1 Cinch socket
Audio Inputs:
S/PDIF (PCM) ..... 1 TOSLINK
Analogous Stereo ..... 2 Cinch sockets
ASI input ..... 1 BNC socket, 75 Ω
ASI output ..... 1 BNC socket, 75 Ω
Connection strip (10-pin): ..... for supply voltages and control circuit
RS-232 socket: ..... serial update interface

Remote maintenance

Remotely controllable (via PSW 1000*): ..... yes
Remote update (via BEflash*): ..... yes
(* and a corresponding management unit)

2.4 Description

The MPEG4 Encoder Cassette converts a HD or SD video and audio signal into a MPEG4 data stream (transport stream) and outputs it via the ASI interface.

For the Video input it can be selected between YPbPr (SD/HD) or CVBS (SD). All common HDTV formats up to a resolution of 1920 × 1080i @ 50/60Hz are supported. The stereo audio signal of a YPbPr resp. CVBS signal can be fed in via the cinch sockets (analogous) or the TOSLINK S/PDIF interface (PCM).

A status LED at the ASI input indicates, whether a input signal is present (green).

The MPEG4 encoder generates a transport stream according to H.264/AVC (Advanced Video Coding) High Profile Level 4.0 standard.

The transport stream can be cascaded via ASI.

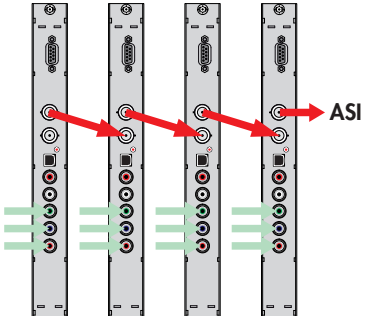

The cassette is designed for use in head-end stations of the standard line.

The operating software of the cassette can be updated via the 9-pin D-SUB socket "RS-232" using a PC or notebook and the software "BE-Flash".

You can find the current operating software on the website "www.gss.de/en".

Signal runtime

Channel switching at a HD source, becomes effective only after a time delay (of up to 3 seconds) because of the signal runtime!

Software versions

Cassette

After activating the cassette the software version of the cassette is displayed (see page 14).

Control unit

To operate these cassettes the software version of the control unit must be "**V44**" or higher. Approximately 5 minutes after the last keypress the software version of the control unit is displayed.

If necessary, you can activate the indication of the software version of the control unit manually:

- Press any two keys on the control unit of the head-end station simultaneously until the display goes dark and the software version, e.g. "**V 44**" appears.

Block diagram

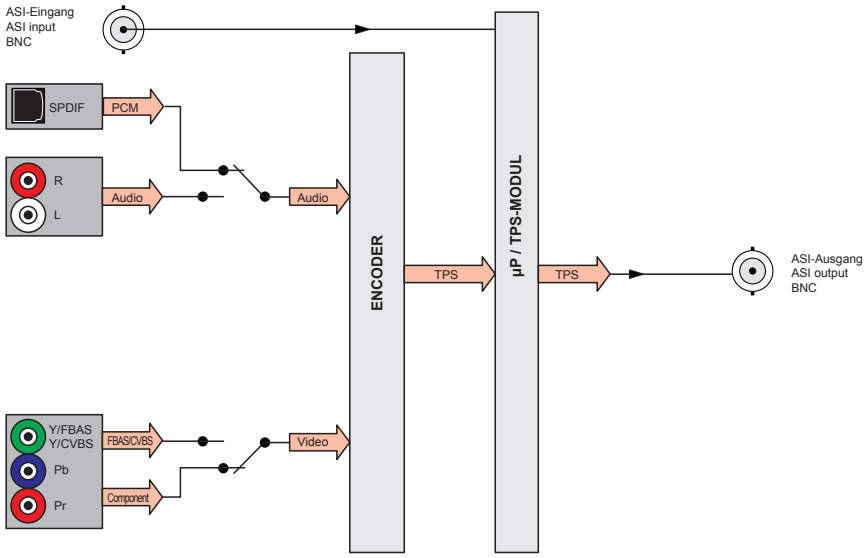

3 Assembly

3.1 Installing the cassette

– Ensure the head-end station is mounted so it will not be able to vibrate. Avoid, for example, mounting the head-end station onto a lift shaft or any other wall or floor construction that vibrates in a similar way.
– Before installing or changing a cassette unplug the power cable from the mains power socket.

- Remove the fastening screws (1) of an unoccupied slot from the bracket of the head-end station.
- Insert the cassette in this slot and push it into the housing.
- Align the cassette and apply slight pressure to connect it to the connections of the board and the HF bus bar.
- Fasten the cassette with the screws (1).

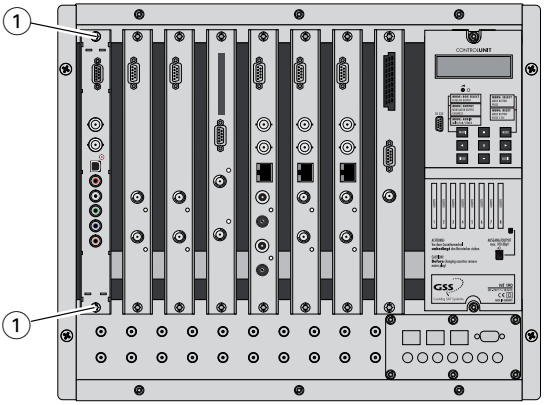

3.2 EMC REGULATIONS

To comply with the current EMC regulations, it is necessary to connect the lines leading in and out of the head-end station using cable terminals.
When mounting the cassette in a head-end station which is installed in a 19" cabinet, make sure the connections leading in and out for the 19" cabinet are made using cable terminals.

The attenuation of shielding of the connection lines for ASI and antenna must meet the requirements for "Class A".

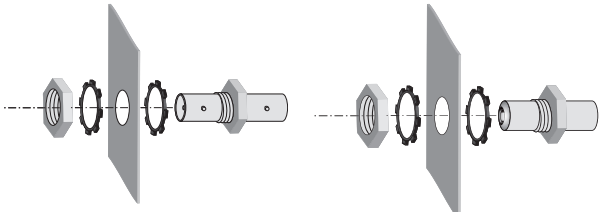

- Insert the required number of cable terminals in the openings provided in the head-end station or in the 19" cabinet.

Tighten the nuts on the cable terminals until the teeth on the lock washer have penetrated the exterior coating and a good connection is made between the housing and cable terminals.

3.3 Cassette overview

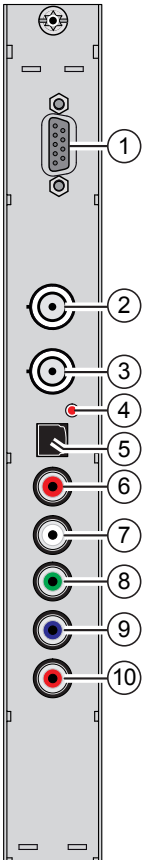

1. D-SUB socket "RS 232"
2. ASI output
3. ASI input
4. Status LED ASI input
5. OPTICAL S/PDIF PCM audio input TOSLINK
6. Audio input R analogous
7. Audio input L analogous
8. Video input Y/CVBS
9. Video input Pb
10. Video input Pr

The operating software of the cassette can be updated via the 9-pin D-SUB socket "RS 232" using a PC or notebook and the software "**BE-Flash**". You can find the current operating software on the website "**www.gss.de/en**".

3.4 Connecting the cassette

- Dependent on the input signal connect the source device via cable terminals to the input sockets "Y/Pb/Pr" 8/9/10 or "CVBS" 8, "Audio R" 6, "Audio L" 7 or "OPTICAL" 5.
- If necessary connect the ASI input 3 and the ASI output 2 to the peripheral devices.
- Connect the head-end station to the mains.

4 The control panel at a glance

4.1 Menu items

Program the cassette using the buttons on the control unit of the head-end station. The two-line display of the control unit then shows the menus.
Use the **MODE** key to select the following main menu items:

- Cassette
- Encoder
- ASI Output
- ASI Input
- Data rate
- TS/ONID
- NIT
- Factory reset

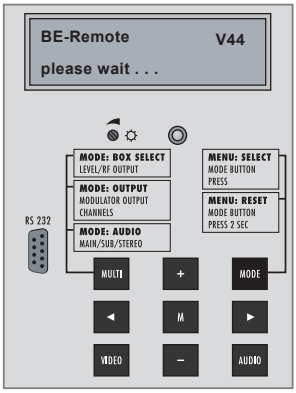

4.2 Control panel

The key pad on the head-end station is used to scroll through the menus:

MODE scrolls forward through the menus.

AUDIO scrolls backward through the menus.

◄/► select parameters in the menus

► selects sub-menus

+/- set values,.

M saves all entries.

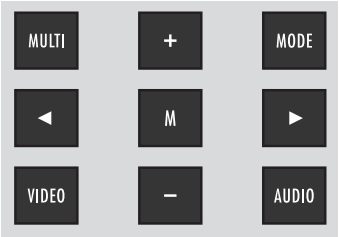

5 Programming

5.1 Programming procedure

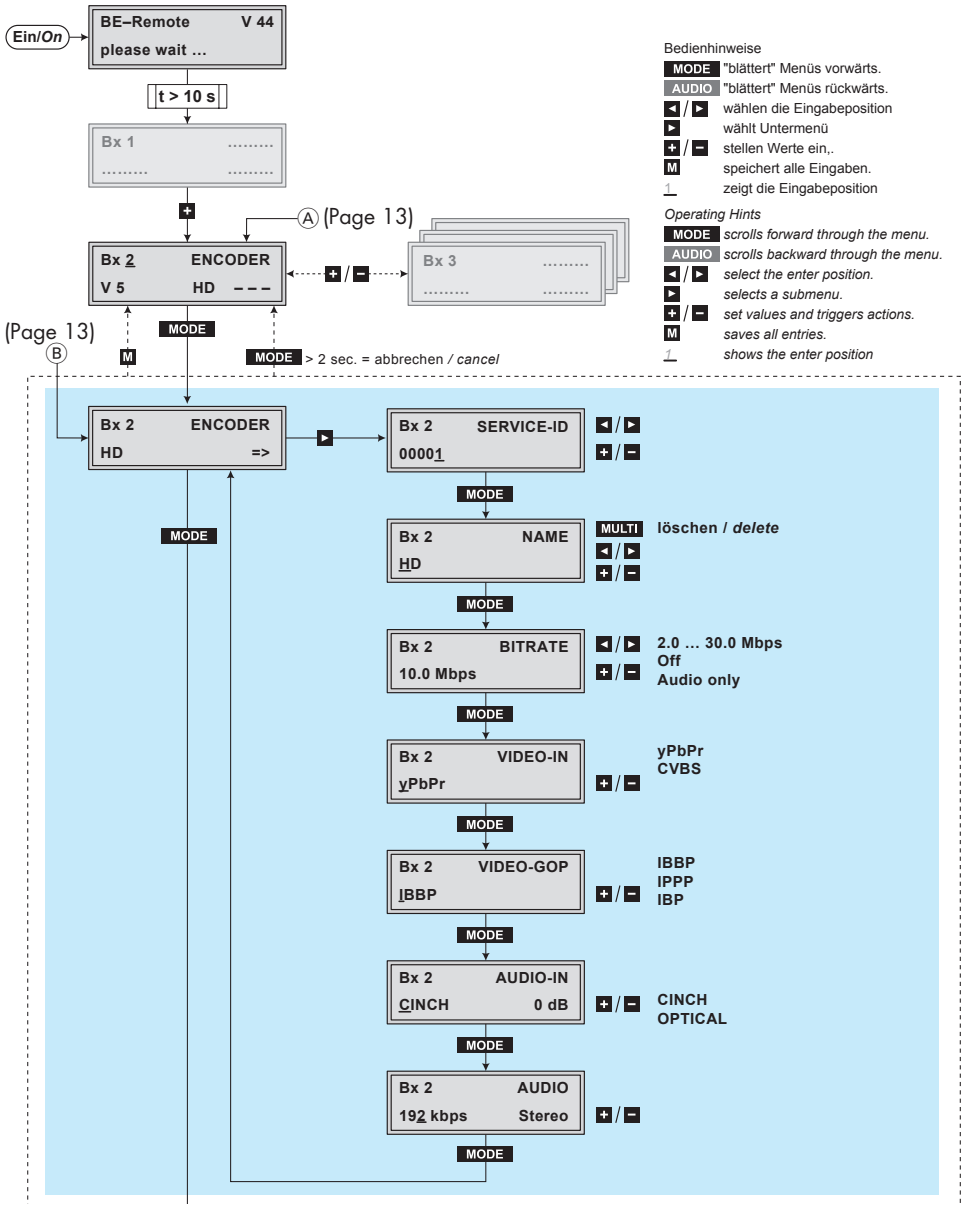

Bedienhinweise

- MODE "blättert" Menüs vorwärts.
- AUDIO "blättert" Menüs rückwärts.
- ◄ / ► wählen die Eingabeposition
- ► wählt Untermenü
- + / – stellen Werte ein,.
- M speichert alle Eingaben.
- ⊥ zeigt die Eingabeposition

Operating Hints

- MODE *scrolls forward through the menu.*
- AUDIO *scrolls backward through the menu.*
- ◄ / ► *select the enter position.*
- ► *selects a submenu.*
- + / – *set values and triggers actions.*
- M *saves all entries.*
- ⊥ *shows the enter position*

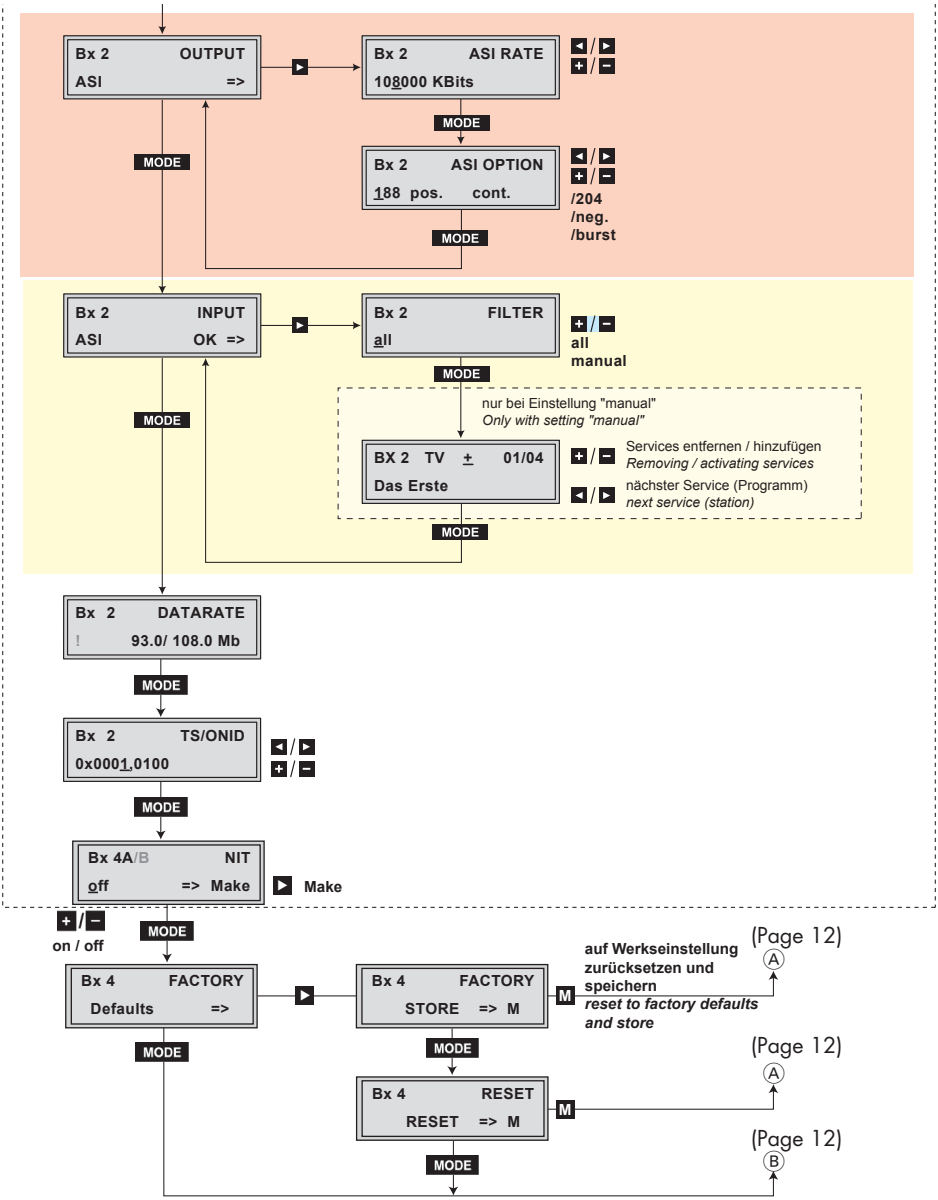
Bx 2 OUTPUT
ASI =>
Bx 2 ASI RATE
108000 KBits
MODE
Bx 2 ASI OPTION
188 pos. cont.
/204
/neg.
/burst
MODE
Bx 2 INPUT
ASI OK =>
Bx 2 FILTER
all
all
manual
MODE
nur bei Einstellung "manual"
Only with setting "manual"
BX 2 TV ± 01/04
Das Erste
Services entfernen / hinzufügen
Removing / activating services
nächster Service (Programm)
next service (station)
MODE
Bx 2 DATARATE
! 93.0/ 108.0 Mb
MODE
Bx 2 TS/ONID
0x0001,0100
MODE
Bx 4A/B NIT
off => Make
Make
on / off
MODE
Bx 4 FACTORY
Defaults =>
Bx 4 FACTORY
STORE => M
auf Werkseinstellung zurücksetzen und speichern
reset to factory defaults and store
(Page 12)
A
MODE
Bx 4 RESET
RESET => M
(Page 12)
A
(Page 12)
B
MODE

—> Pressing the **MODE** button for longer than 2 seconds cancels the programming procedure. This takes you back to the programme item "Selecting the cassette" from any menu. Any entries that have not been saved are reset to the previous settings.
—> Entries in the menus can be saved by pressing the **M** key. You are taken back to the "Selecting the cassette" menu item.
—> The parameters and functions to be set are underlined (Cursor).

- Switch on the head-end station.

—> The display shows the software version (e.g. V 44)
—> The processor reads the cassettes' data (approximately 10 seconds).

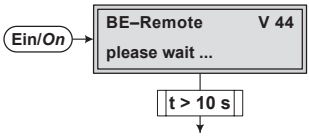

SELECTING THE CASSETTE

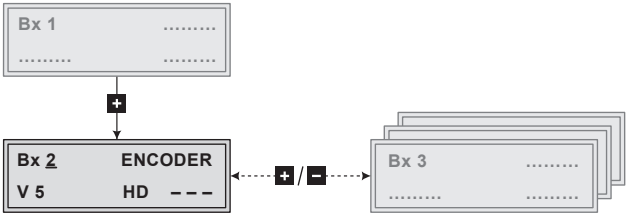

- If necessary select the cassette to be programmed by repeatedly pressing the **+** button (e.g. **Box 2**).

—> The display shows e.g. the menu "**Bx 2 ENCODER**":

"**Bx 2**"	stands for slot 2
"**ENCODER HD**"	type of cassette
"**V 5**"	software version of the cassette

- Press the **MODE** button.

—> The "Encoder settings" – "**ENCODER**" main menu is activated.

Encoder

Via this menu you get access to the submenus in order to do the encoder settings and to select the desired input.

—> If no encoder settings should be done, press button **MODE**.
The "ASI output" – "**OUTPUT**" main menu is activated (page 18).

- Press button ▶.

—> The "**SERVICE-ID**" submenu is activated.

Service ID (SID)

In this menu you can assign a Service ID for the signal which is to be encoded.

```
Bx 2        SERVICE-ID
00001
```

- Use the ◀/▶ buttons to select the digit of the SID to be set and use +/- buttons to set the desired SID.

—> Take care, not to assign the same SID twice.

- Press the **MODE** button.

—> The "Programme name" – "**NAME**" submenu is activated.

Programme name

In this menu, a programme name for the signal which is to be encoded, can be set.

```
Bx 2            NAME
HD
```

- Use the ◀/▶ buttons to select the digit of the channel name to be set and use +/- buttons to set the desired character .

—> Press button **MULTI** to delete the complete name.

- Press the **MODE** button.

—> The "Total data rate" – "**BITRATE**" submenu is activated.

Total data rate

In this menu you set the total data rate (video + audio + tables), with which the input signal shall be encoded.

```
Bx 2          BITRATE
10.0 Mbps
```

—> The higher the resolution of the input video signal, the higher the data rate must be set:

1920x1080i	6,3 Mbit/s...24 Mbit/s
1280x720p	4,3 Mbit/s...24 Mbit/s
720x576i	1,3 Mbit/s...10 Mbit/s
720x480i	2,3 Mbit/s...10 Mbit/s

- Use the **+**/**-** buttons to set the data rate of the video signal (**1.0**...**30.0** Mbit/sec). If only audio signals are to be encoded, set the data rate to "**Audio only**". In setting "**Off**" the encoder is switched off.

- Press the **MODE** button.

—> The "Video signal type/input" – "**INPUT**" submenu is activated.

Video signal type/input

In this menu you select whether you would like to feed in a Composite video signal "**YPbPr**" via the green/blue/red cinch sockets or a CVBS video signal "**CVBS**" via the green cinch socket.

```
Bx 2          VIDEO-IN
yPbPr
```

- Use the **+**/**-** buttons to select the desired type of video signal / input.

- Press the **MODE** button.

—> The "Group of Picture" – "**VIDEO-GOP**" submenu is activated.

Group of Picture – GoP

The GoP describes the order of reference and difference pictures of the data stream. This influences the compression.

```
Bx 2        VIDEO-GOP
IBBP
```

- Use the **+** / **-** buttons to select the desired "Group of Picture" (GoP).

—> IBBP – high compression – HDTV at low data rate for "normal picture contents" at higher channel switching delay.
IBP – medium compression – HDTV at medium data rate for "fast moving contents" (e.g. sport) at medium channel switching delay.
IPPP - minor compression – HDTV at high data rate for "fast conversion" at short channel switching delay.

- Press the **MODE** button.

—> The "Audio input/Audio level" – "**AUDIO-IN**" submenu is activated.

Audio input / Audio level

Herein you can select the audio input, via which the corresponding sound signal shall be fed.

```
Bx 2        AUDIO-IN
CINCH          0 dB
```

—> An analogous audio signal can be fed via the cinch sockets and a digital PCM audio signal can be fed via the "Toslink" socket (optical S/PDIF interface).

Audio input:

- Use the **+** / **-** buttons to select the desired audio input.

Audio level:

- Press button **▶**, to get to the level setting.
- Use the **+** / **-** buttons to enter the desired audio level (-11dB…+11dB).

- Press the **MODE** button.

—> The "Audio data rate" – "**AUDIO**" submenu is activated.

AUDIO DATA RATE

In this menu you set the data rate with which the audio signal shall be encoded.

Bx 2	AUDIO
192 kbps	Stereo

- Use the **+** / **-** buttons to enter the desired audio data rate.

—> Some data rates are selectable for mono as well as stereo signals.

- Press the **MODE** button.

—> Return to the main menu "Encoder settings".

- Press the **MODE** button.

—> The "ASI output" – "**OUTPUT ASI**" main menu is activated.

ASI OUTPUT

Herein you get access to the submenus for ASI output settings.

—> If no ASI output settings should be done, press button **MODE**.
The "ASI Input station filter" – "**INPUT**" main menu is activated.

Bx 2	OUTPUT
ASI	=>

- Press the **▶** button.

—> The "ASI transfer rate" – "**ASI RATE**" submenu is activated.

ASI TRANSFER RATE

In this menu you set the transfer rate for the ASI component connected (incl. stuffing - filled up user data rate).
For this setting please take the required information from the documentation (technical data) of the ASI component to be connected.

```
Bx 2          ASI RATE
108000 KBits
```

- Use the ◄/► buttons to select the digits to be set for the transfer rate then use the +/- buttons to set the transfer rate wished.

- Press the **MODE** button.

—> The "ASI options" – "**ASI OPTION**" submenu is activated.

ASI OPTIONS

In this menu you define the size of the data packets, their polarity and the type of transmission.
For this setting please take the required information from the documentation (technical data) of the ASI component to be connected.

```
Bx 2          ASI OPTION
188  pos.      cont.
```

- Press the +/- buttons to set the size of the data packets ("**188**" or "**204**" bits).

- If the polarity of the data to be transmitted has to be changed, press the ◄/► to select "**pos.**" (positive – standard) and using the +/- buttons set to "**neg.**" (negative).

- To change the type of transmission press the ◄/► buttons to select "**cont.**" (continuous – standard) and using the +/- buttons set to "**burst**".

—> Setting "**cont.**"
The data packets of the user data are spaced out evenly in the transport stream.

—> Setting "**burst**"
The data packets of the user data are collected to a great data packet in the transport stream.

- Press the **MODE** button.

—> Return to the main menu "ASI output"

- Press the **MODE** button.

—> The "ASI Input station filter" – "**INPUT**" main menu is activated.

ASI Input station filter

Herein you get access to the submenus for ASI input filter settings.

—> If no ASI input filter settings should be done, press button **MODE**.
The "Output data rate" – "**DATARATE**" main menu is activated (page 22)

```
Bx 2          INPUT
ASI           OK  =>
```

—> If no ASI input signal is present, "– –" is displayed instead of "OK".

```
Bx 2          INPUT
ASI           – –  =>
```

- Press the ▶ button.

```
Bx 2          FILTER
all
```

Using buttons **+** / **-** you can select, whether all services (all) or only selected services (manual) are passed through.

- Activate the filter function by selecting "**manual**".

- Press the **MODE** button.

—> All services from the ASI input will be read, and then displayed with name and type of the service..

—> If no service is found, the following message will appear in the display: "**no Service**". In this case, check previously adjusted settings for the cassette and the components connected to the ASI input.

—> The display shows e.g.:

```
Bx 2   TV   ±     01/04
Das Erste
```

Meaning of the indicators in the example:

"**TV**"	"Television" (type of service)
" **+** "	The currently selected service is passed through
"**01/04**"	The 1st of 4 services is being displayed.
"**Das Erste**"	Name of the service

Further possible terms displayed:

"**ASI**"	ASI station filter
"**RA**"	"Radio" (type of service) For radio stations, the background of the screen of the connected TV or test receiver is darkened.
" **–** "	The currently selected service is blocked.
" * "	The star means that the service selected is scrambled.

—> If a service number (e.g. "**131**") appears instead of "**TV**" or "**RA**", this indicates that an unnamed service or an undefined transport stream is being received.

- Use the ◄/► buttons to call up the services in sequential order, then use **+**/**-** buttons to pass through (indicated by " **+** ") or to block them (" **–** ").

—> If the filter function is activated (setting "manual"), only services which are marked by "+" will be passed. If the services at the ASI input are changed, new services (which are not marked by "+") will be blocked.

—> Pressing the **MULTI** button all services can be passed through or blocked.

- Press the **MODE** button.

—> Return to the main menu "ASI input station filter"

- Press the **MODE** button.

—> The "Output data rate" – "**DATARATE**" menu is activated.

OUTPUT DATA RATE

Herein the current needed and the maximum data rate is displayed.

```
Bx  2        DATARATE
          93.0/ 108.0 Mb
```

—> The maximum data rate is dependent on the settings of the ASI data rate.

If the current needed data rate is higher than the maximum possible data rate, a "!" is indicated.

```
Bx  2        DATARATE
!        112.0/ 108.0 Mb
```

—> The value 108.0Mb results from the ASI RATE setting.
In this case correct the corresponding settings.

- Press the **MODE** button.

—> The "Transport stream ID and ORGNET ID" – "**TS/ONID**" menu is activated.

Transport stream ID and ORGNET ID

If the input signals are encoded to a separate transport stream (if no transport stream with ORGNET-ID is present at the ASI input), a new ORGNET-ID must be assigned to the transport stream.

```
Bx  2          TS/ONID
0x0001,0100
```

- Use the ◄/► buttons to select the digit of the hexadecimal number to be set and use the + / - buttons to set the desired character.

—> The combination of TS and ON ID must be unique at the plant.
—> If the TS/ONID was changed a new NIT must be generated.

- Press the MODE button.

—> The " Network Information Table" – "**NIT**" menu is activated.

Network Information Table (NIT)

```
Bx  2                NIT
off            => Make
```

- Use the + / - buttons to switch off or on the NIT.
- Press the ► button to activate NIT "**Make**".

—> All active cassettes which are able to output a NIT ("NIT cassettes") must be set and ready for reception.
—> The NITs of all "NIT cassettes" are switched on.
—> The cassette fetches all the information (output frequencies, output data rates, etc.) it needs from all the "NIT cassettes" in order to generate the NIT. This process may take a few seconds.
Then the NIT is generated, added and sent to all "NIT cassettes". The other "NIT cassettes" also add this new NIT. The status of all "NIT cassettes" in the NIT menu changes to "**on**".
The display shows: "**read ... / copy ...**".

- To switch off the new NIT ("**off**") press the **-** button.

—> The NITs of the other "NIT cassettes" will stay switched on. When the NIT of the cassette is switched on again ("**on**") by pressing the **-** button, the previously generated NIT is added again. If you have changed parameters in the meantime, you must first select "**Make**" to generate a new, up-to-date NIT.

- Press the **MODE** button.

—> The "Factory reset" – "**FACTORY Defaults**" main menu is activated.

Factory reset / Soft reset

Via this menu you get access to the submenus to reset all settings to the factory defaults or to perform a soft reset (cassette restart).

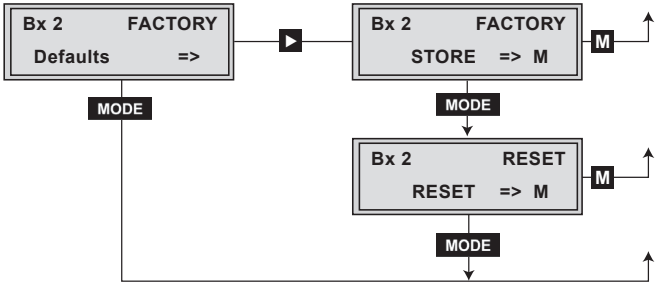

Factory reset

- Press the **▶** button.

—> The "Factory Store" submenu is activated.

- In order to perform a factory reset press the **M** button.

—> The cassette is reset to factory defaults. The display shows "STORE"
—> Back to "Selecting the cassette" (page 14).

- In order to perform a soft reset (cassette restart) or to return to the main menu "Factory Default" press the **MODE** button.

—> The "Reset" submenu is activated.

Soft reset

In this submenu you can perform a soft reset (cassette restart).

```
Bx 2          RESET
     RESET  => M
```

- In order to perform a soft reset (cassette restart) press the **M** button

—> The cassette is restarted.
—> By pressing the **MODE** button, you will be returned to the main menu "Encoder" **without** saving the factory defaults (page 15).

Saving settings

- Press the **M** button.

—> Return to "Selecting the cassette" (page 14).
—> The settings are saved.

6 Final procedures

After installing the head-end station, upgrading accessories or installing cassettes it is necessary to tighten all cable connections, cable terminals and cover screws in order to maintain compliance with current EMC regulations securely.

- Securely tighten the cable bolted connections using an appropriate open-ended spanner.
- Mount the front cover (see assembly instructions of the head-end station).

Declaration of CE conformity

GSS	Konformitätserklärung Declaration of Conformity 139/ 13	CE

Der Hersteller/Importeur
The manufacturer/importer: **GSS Grundig SAT Systems GmbH**

Anschrift / Address / Adresse: **Beuthener Straße 43, D-90471 Nürnberg, Germany**

erklärt hiermit eigenverantwortlich, daß das Produkt:
declare under their sole responsibility that the product:

Bezeichnung / Name / Description: **Head-End Digital HD Encoder**

Type / Model / Type: **GSS HDE 401**

Bestell-Nr. / Order-No.: **GAS 5400**

folgenden Normen entspricht:
is in accordance with the following specifications:

EN 50083-2:	*2012*	*EN 60065:*	*2002*
EN 50581:	*2012*	*EN 60065 + A1:*	*2006*
		EN 60065 + A11:	*2008*
		EN 60065 + A2:	*2010*
		EN 60065+ A12:	*2011*

Das Produkt erfüllt somit die Forderungen folgender EG-Richtlinien:
Therefore the product fulfils the demands of the following EC-Directives:

2006/95/EG	**Richtlinie betreffend elektrische Betriebsmittel zur Verwendung innerhalb bestimmter Spannungsgrenzen Directive relating to electrical equipment designed for use within certain voltage limits**
2004/108/EG	**Richtlinie über die elektromagnetische Verträglichkeit Directive relating to electromagnetic compatibility**
2011/65/EG	**Richtlinie zur Beschränkung der Verwendung bestimmter gefährlicher Stoffe in Elektro- und Elektronik Altgeräten Directive on the restriction of the use of certain hazardous substances in electrical and electronic equipment**

Nürnberg, 22. August 2013

Michael Bierschneider
Leiter Entwicklung
Manager Development / Directeur Développement

Service:

Phone: +49 (0) 911 / 703 2221 • Fax: +49 (0) 911 / 703 2326 • Email: service@gss.de
Grundig SAT Systems GmbH • Beuthener Straße 43 • D-90471 Nürnberg

 V5/27112013